11/6/20 EXP NO.: 5 VERIFICATION OF NORTON'S THEOREM

AIM:

To verify Norton's theorem practically and practically for the given DC circuit.

APPARATUS REQUIRED:

SL. NO.	APPARATUS	SPECIFICATION	QUANTITY
1.	Regulated Power supply	(0-30V)	1
2.	Voltmeter	(0-30V) MC	1
3.	Ammeter	(0-10mA) MC	1
4.	Resistors	470Ω, 560Ω, 1kΩ	2, 1, 1
5.	Bread board	—	1
6.	Multimeter	—	1

Circuit diagram :

To measure I_L :

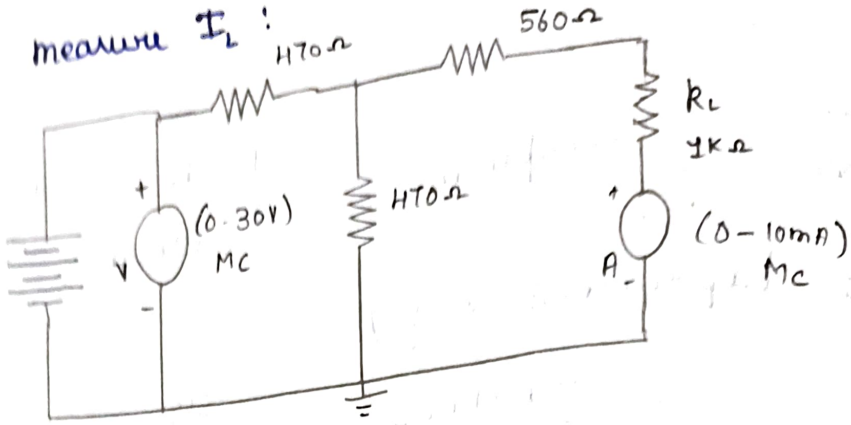

To measure R_{th} or R_N :

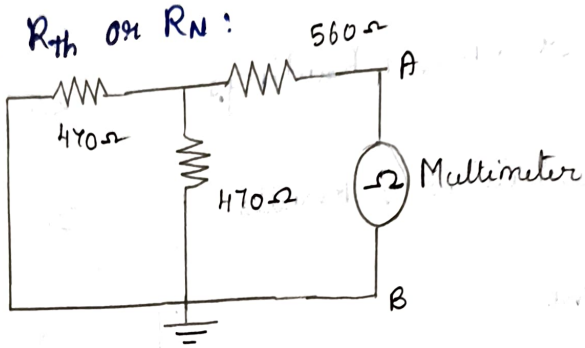

To measure I_N or I_{sc} :

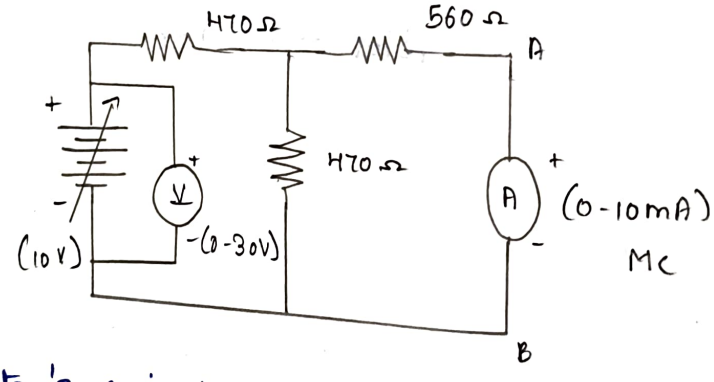

Norton's equivalent circuit :

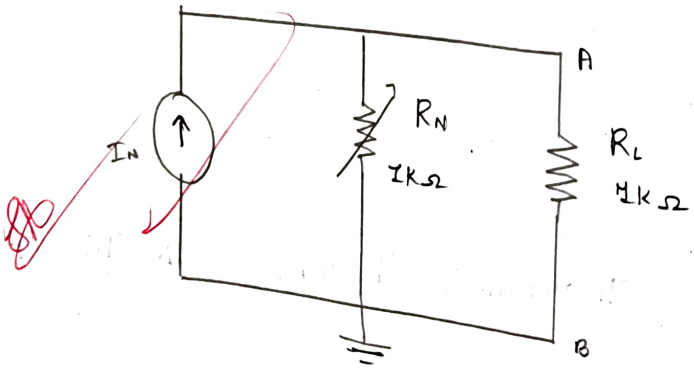

PROCEDURE :

1. Make the connection as per the circuit diagram : 1.
2. Vary the RPS and set an input voltage of 10V.
3. Note down the voltmeter reading (V_i) and ammeter reading (I_L) in tabular column. 1.
4. Switch off the supply and make connections for circuit diagram 2.
5. Measure the Thevenin's resistance R_{Th} = Norton's resistance R_N.
6. Switch off the supply and make connections for circuit diagram 3.
7. Set an input voltage of 10V in the RPS and note down the voltmeter readings V_i and V_{Th} ($= V_{oc}$) in tabular column 3.
8. Switch off the supply and make connections for circuit diagram 4.
9. Set an input voltage of 10V in the RPS and note down the voltmeter reading V_i and ammeter reading I_N ($= I_{sc}$) in tabular column 4.

10. Draw the Thevenin's equivalent circuit and Norton's equivalent circuit as shown in circuit diagrams 5 & 6 respectively.

11. Calculate the I_L value using the formula

Thevenin's Theorem

$$I_L = V_{Th} / (R_{Th} + R_L)$$

Norton's Theorem

$$I_L = I_N * R_N / (R_N + R_L)$$

. Theoretically verify the Norton's theorem.

TABULAR COLOUMN 1 :

To measure I_L :

V_i (volts)	I_L (amps)
6	1.07
8	1.43
10	1.73

TABULAR COLOUMN 2 :

V_i (volts)	R_{Th} (Ω)
6	803
8	796
10	800

TABULAR COLOUMN 3 :

V_i (volts)	I_N (amps)
6	2.45
8	3.25
10	4.05

8/6
O/P verified

MARKS SPLIT-UP :

SL. NO.	Description	Marks allotted	Marks obtained
1.	Experimental setup / connections	20	20
2.	Observation / Readings	20	20
3.	Calculations / Results	20	20
4.	Viva	20	20
5.	Record	20	20
	Total =	100	100

10

RESULT :

Thus, Thevenin's and Norton's theorem is verified practically and theoretically.